Size Unit: mm

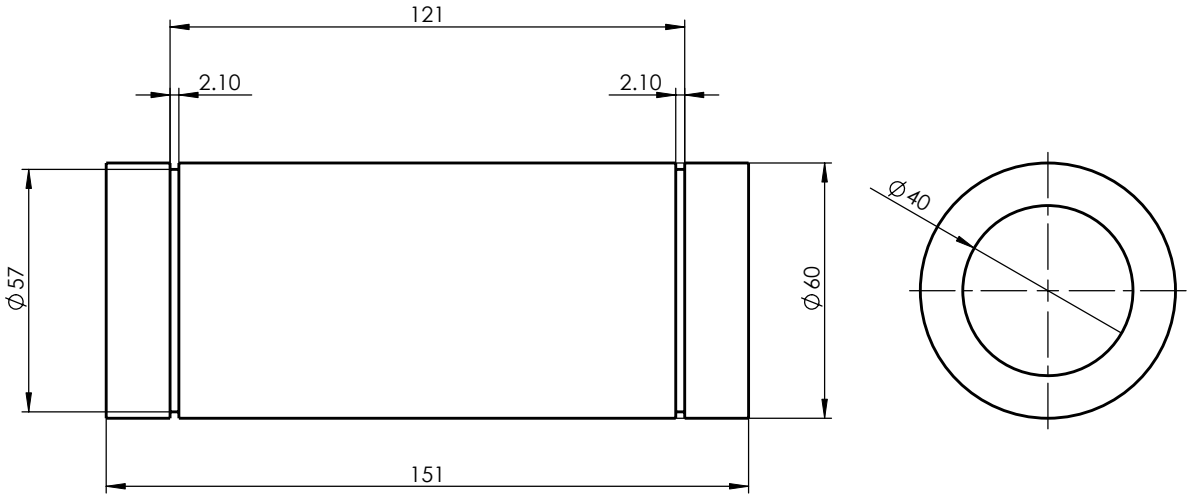

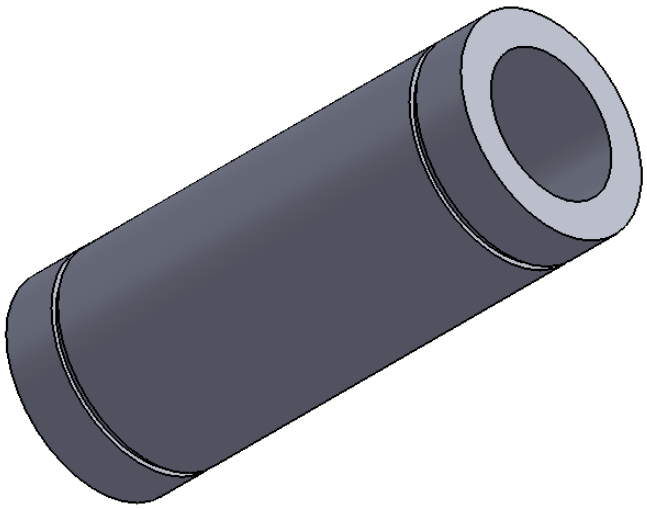

Register										
Tracing										
Calibrating										
Former No.										
Drawing No.						LM40LUU			Drawing No.	
Signature	Marker	Numbers	Reversion	Signature	Date				Material	Heat Treatment
	Design		Standarization			Drawing Mark	Weight	Scale		
Date	Check		Approved							
	Review									
	Technics		Date	2013-10-14		A Total Of 1 Pages	Page No. 1			