Size Unit: mm

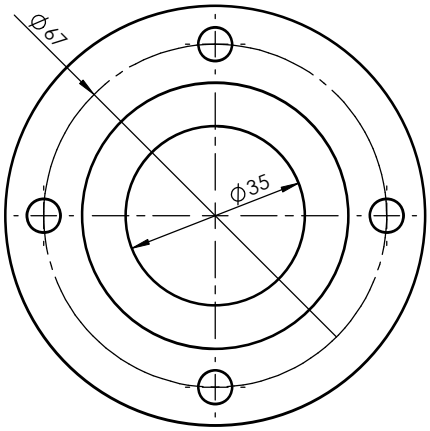

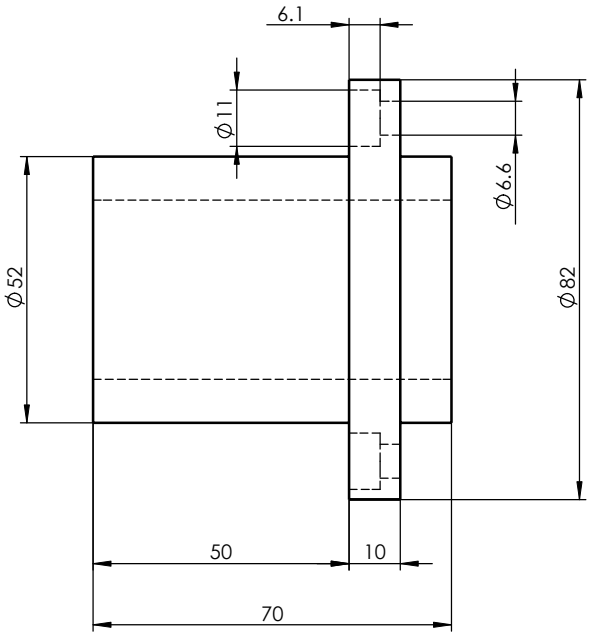

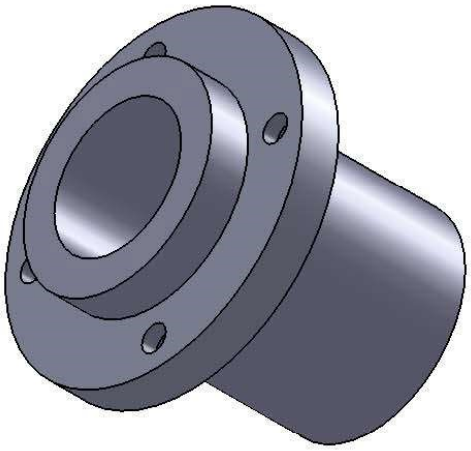

Register									
Tracing									
Calibrating									
Former No.									
Drawing No.						LMFP35UU		Drawing No.	
Signature	Marker	Numbers	Reversion	Signature	Date			Material	Heat Treatment
	Design		Standarization			Drawing Mark	Weight	Scale	
Date	Check		Approved						
	Review								
	Technics		Date	2013-10-14		A Total Of 1 Pages	Page No. 1		